CV-31 / CV-34
Filling Valve
DN50/PN16, 2-Way Valve with On/Off Valve Actuator (N.C.)
V5328A1096 / ML6421A3005

CV-32 / CV-35
CT Pipe Drain Valve
DN25/PN16, 2-Way Valve with On/Off Valve Actuator (N.O.)
V5328A1062 / ML6420A3007

CV-33.1 / CV-33.2
CT Reservoir Drain Valve
DN50/PN16, 2-Way Valve with Proportional Valve Actuator
V5328A1096 / ML7421A3004

CT7a-CM
Conductivity Meter

Cooling Tower-7A

Cooling Tower-7B

CT7b-CM
Conductivity Meter

CT7-TR
CT7a-TS
CT7b-TS
Immersion Type Water Temperature Sensor
VF20T

CT7a-WM
CT7b-WM
Watermeter, DN50/PN16
MW-HFD2-100L

CT7a-FS
CT7b-FS
Flow switch
KSW230

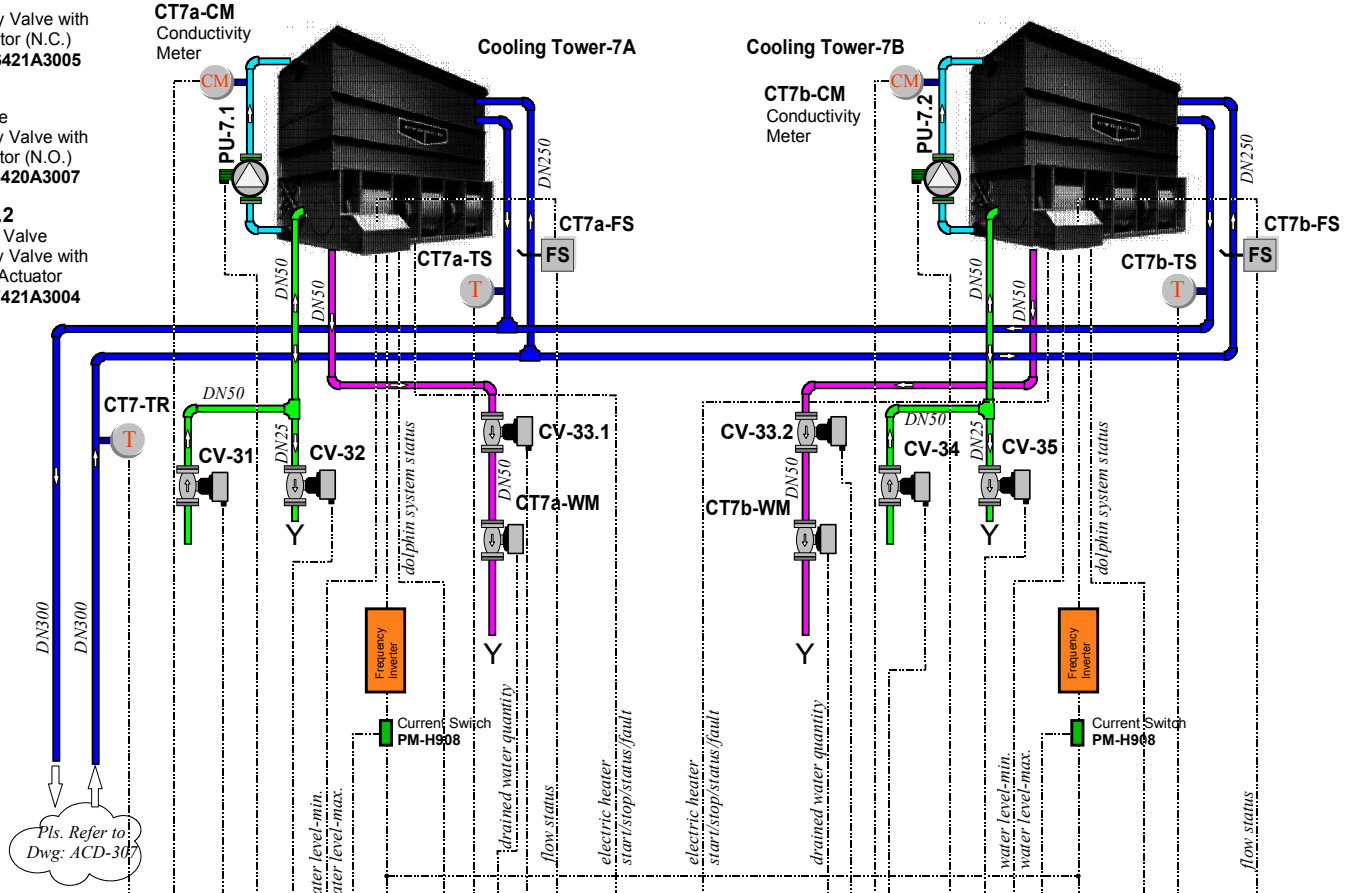

t_{out} = outdoor air temperature

$t_{out} \leq 0\ °C$ **CV-32, CV-35** *Opened*
$t_{out} > 0\ °C$ **CV-32, CV-35** *Closed*

$t_{out} \leq -10\ °C$ **CV-33.1 / CV-33.2** *Opened*
$t_{out} > -10\ °C$ **CV-33.1 / CV-33.2** *Closed*

DDC Controller Input / Output Terminals

Point Type		Total	
Analog Inputs		5	AI
Analog Outputs		3	AO
Digital Inputs		30	DI
Digital Outputs		9	DO

Certified Star Partner **Honeywell**

AEE Building Automation and Control Systems
Emirhan Cad., No: 52/6, 34349 Dikilitas, Istanbul
Tel : +90(212) 258 75 42 Fax : +90(212) 258 75 43
E-Mail : aee@aee.com.tr

Proje Adı / *Project Name* : Enka Construction and Industry Co.Inc. Moscow City Trading Center C Block Building Automation System

Açıklama / *Description* : Main Cooling System-Cooling Towers Automatic Control Principle Drawing

Resim No / *Drawing No* : CITY C-ACD-314

Ilgili Cihazlar / *Related Devices* :

Ilgili Resimler / *Related Drawings* : CITY C-ACD-301 / 302 / 303 / 304 / 305 / 306 CITY C-ACD-307 / 308 / 309 / 310 / 311 / 312 CITY C-ACD-313 / 315 / 316

Rev. No / *Rev. No* :	0
Tarih / *Date* :	12.02.2007
Yapan / *Designed By* :	Süleyman AKDEMIR
Kontrol / *Checked By* :	Süleyman AKDEMIR
Rev. İzahı / *Rev. Desc.* :	For application
Sayfa / *Page* :	F015